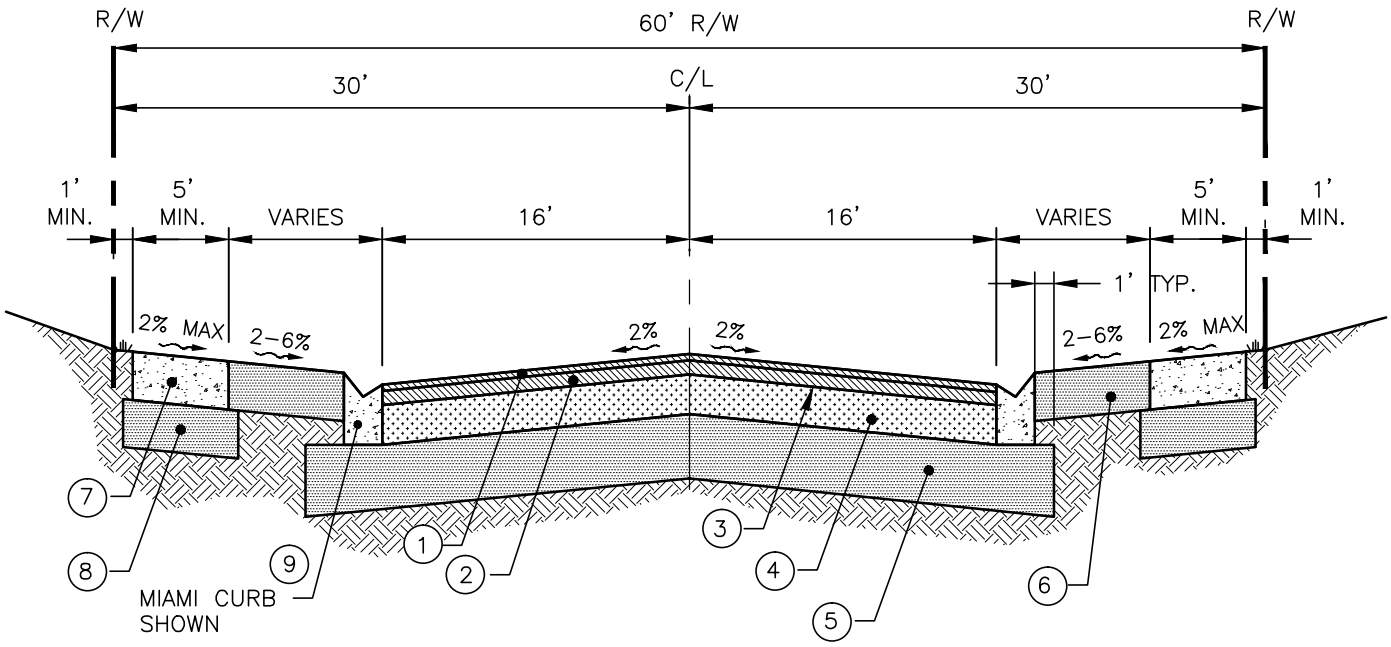

1. **ROADWAY FRICTION COURSE:** 1-1/2" OF FC-12.5 DENSE GRADED FRICTION (REQUIRED FOR DESIGN SPEED OF 35 MPH OR GREATER) DESIGN SPEEDS BELOW 35 MPH THE FRICTION COURSE IS TO BE CHANGED TO SP-12.5 AND ADDED ON TOP OF THE STRUCTURAL COURSE FOR A TOTAL OF 3-1/2".

2. **STRUCTURAL COURSE:** 2" OF TYPE S-1 OR SP-12.5 ASPHALTIC CONCRETE TESTED PER FDOT AND/OR BREVARD COUNTY STANDARD REQUIREMENTS

3. **PRIME/TACK COAT:** PER FDOT STANDARD SPECIFICATIONS, LATEST EDITION, SECTION 300

4. **ROADWAY BASE:** 10" LIMEROCK OR CEMENTED COQUINA, LBR 100 COMPACTED TO 98% MAX. DENSITY PER AASHTO T-180; OR 10" SOIL CEMENT, MIN 300 PSI, COMPACTED TO MIN. 97% MAX DENSITY PER AASHTO T-134

5. **ROADWAY SUBGRADE:** 12" TYPE "B", STABILIZED TO A MIN. LBR 40 AND COMPACTED TO 98% AASHTO T-180

6. **SHOULDER:** 8" TYPE B SUBGRADE, STABILIZED TO A MIN. LBR 40 AND COMPACTED TO 98% AASHTO T-180

7. **PEDWAY:** 6" THICK CONCRETE, FDOT CLASS 1, FIBER REINFORCED, 28 DAY 3000 PSI, WITH LIGHT BROOM FINISH CROSS SLOPE SHALL BE BETWEEN 1.0% MIN AND 2.0% MAX

8. **PEDWAY SUBGRADE:** 6" THICK TYPE "B" STABILIZED TO A MIN. LBR 40 AND COMPACTED TO MIN. 98% MAX. DENSITY PER AASHTO T-180

9. **CURBING:** FDOT TYPE CURBS SHALL BE A MINIMUM OF 3000 PSI CONCRETE AND CONSTRUCTED IN ACCORDANCE WITH SECTION 300 OF THE FDOT DESIGN STANDARDS, LATEST EDITION.

10. **ALL DISTURBED AREAS:** ARE TO BE SODDED (WITHIN THE R/W)

COMMERCIAL AND INDUSTRIAL SUBDIVISION ROADWAY SECTION WITH CURB AND GUTTER

REV:	BREVARD COUNTY LAND DEVELOPMENT 2725 JUDGE FRAN JAMIESON WAY, VIERA, FL 32940	**EXHIBIT - 6**	DATE: MAY-2008